i-Slide

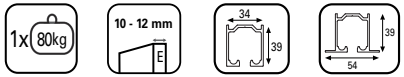

Door weight | Glass Thickness | Carrier track U21 RT | Carrier track U21 CA

SLIDE

HP = HV - 56
AP = (AV/2) + 20

FIXED

HP = HV - 30

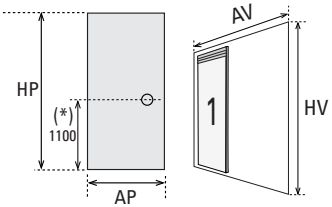

(*) Reference measure

Kit pieces

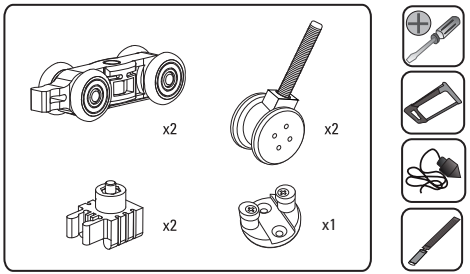

All measurements are in milimeters.

mm	Decimal inches	Aprox Fraction	mm	Decimal inches	Aprox Fraction
1	0.0394	3/64	6	0.2362	15/64
2	0.0787	5/64	7	0.2756	9/32
3	0.1181	1/8	8	0.3150	5/16
4	0.1575	5/32	9	0.3543	23/64
5	0.1969	13/64	10	0.3937	25/64

V01.10.12

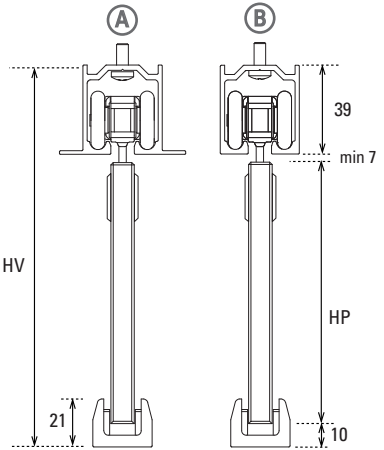

Glass cut-out

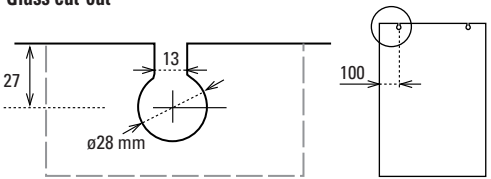

Instructions

1 1.1

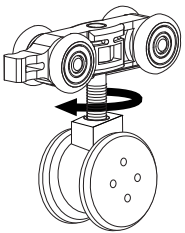

1.2

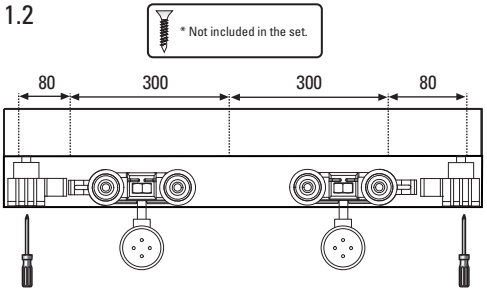

2 2.1

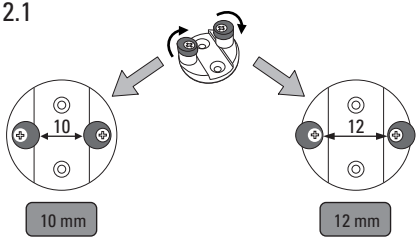

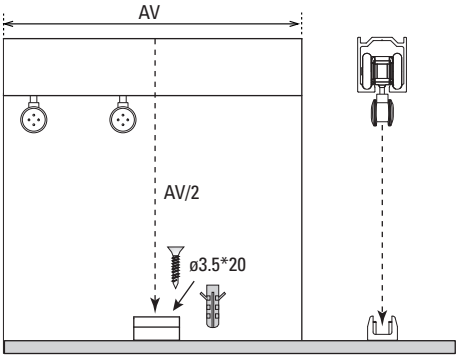

2.2

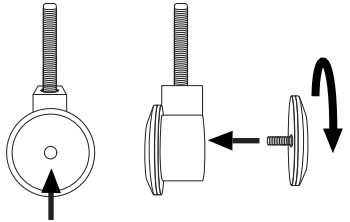

③ 3.1

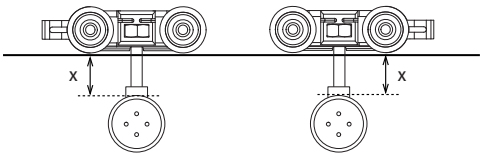

3.2

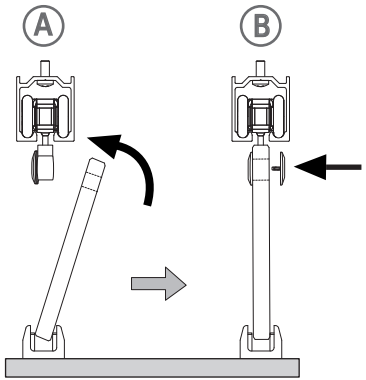

✳ ACCESORIES

Full Length Wall Bracket

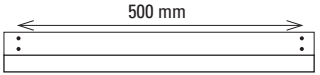

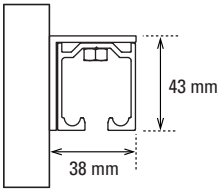

Glass stopper

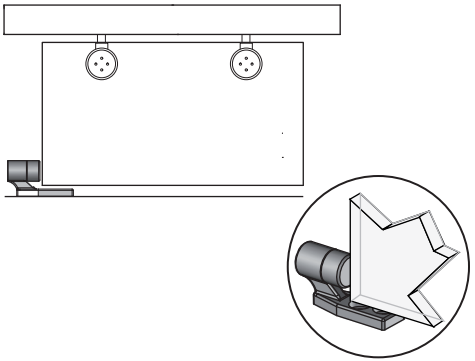
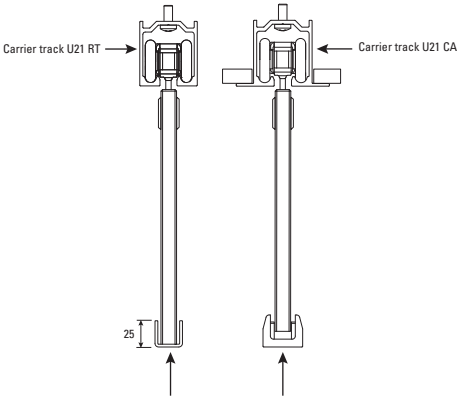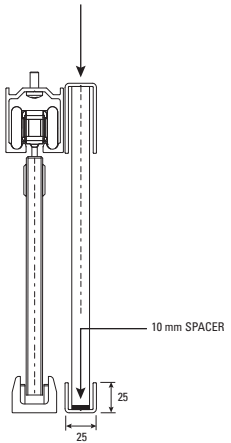
Carrier tracks