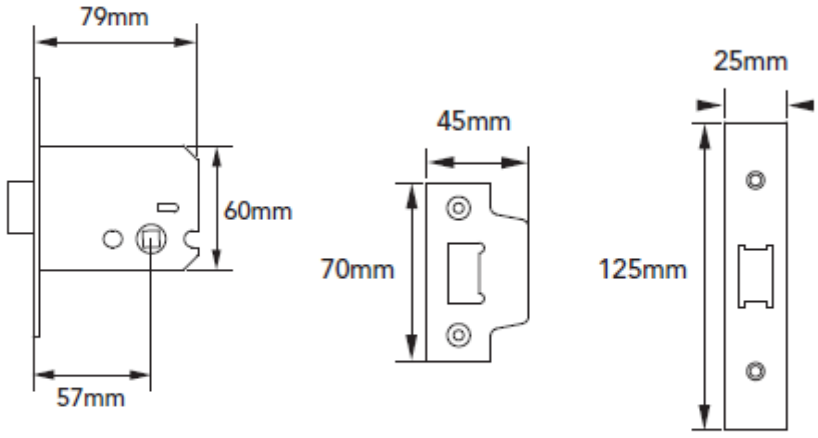
79mm
60mm
57mm
45mm
70mm
25mm
125mm