SCHLEGEL UK

Henlow Industrial Estate,
Henlow Camp,
Bedfordshire,
SG16 6DS
Tel: +44 (0) 1462 815500
Fax: +44 (0) 1462 638800
E-mail: schlegeluk@schlegel.eu.com

** Registered trademark of Schlegel Systems Inc.*

AQUAMAC* 4846

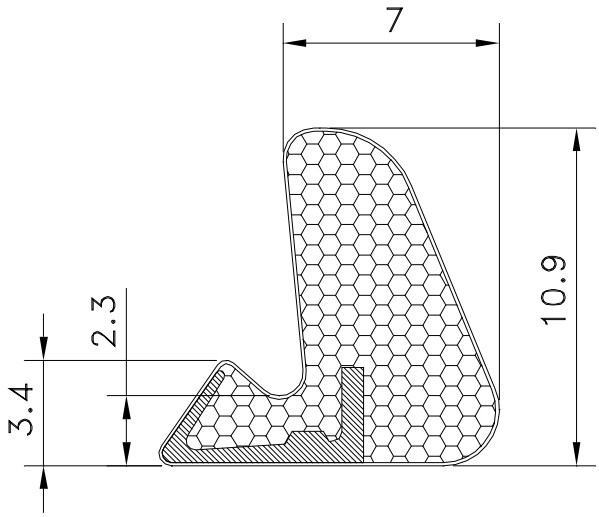

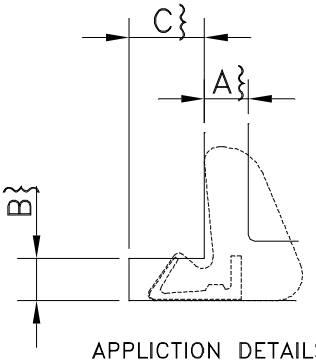

APPLICTION DETAILS

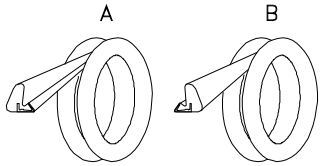

COIL DIRECTION

TECHNICAL SPECIFICATION
A, SEAL GAP. 3.5mm MIN TO 5.6mm MAX
B, KERF SLOT WIDTH. 2.7mm NOMINAL
C, MINIMUM KERF SLOT DEPTH 5.5mm

PART NUMBER	COLOUR	METRES/COIL	COIL DIRECTION	APPLICATION
02248460	WHITE	200	A	WEATHERSEAL
02248461	BRONZE	200	A	WEATHERSEAL
02248465	BLACK	200	A	WEATHERSEAL
02248466	BEIGE	200	A	WEATHERSEAL

60279-0A