INDIVIDUAL PULL-OUT PLUS - 300/400/450/500/600mm

Assembly and fitting instructions

***IMPORTANT* - The unit has a maximum loading limit of 25kg. All fixings supplied must be used for installation.**

Parts

A x5 3.5 x 40mm countersunk screw

B x5 3.5 x 16mm countersunk screw

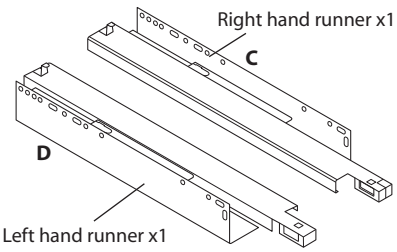

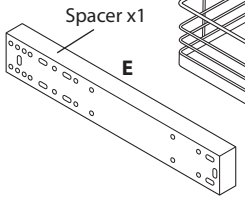

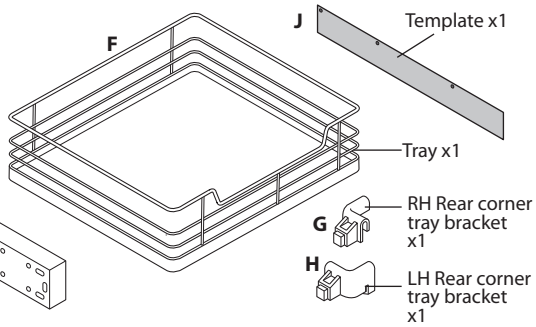

Please ensure that all the above fittings are present before installation begins.

Tools required

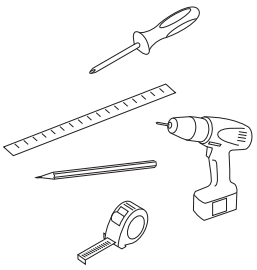

1 Use template to mark screw positions for left and right hand runners.

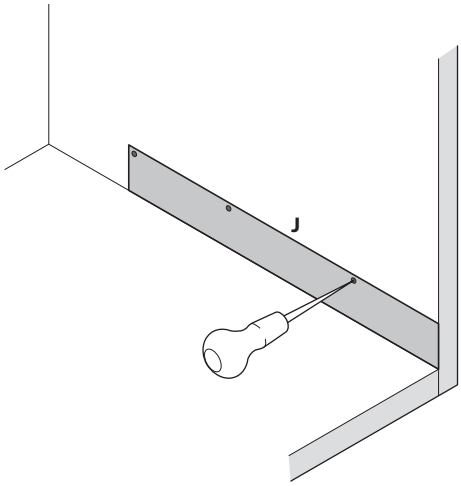

2 Secure runners to cabinet using 5 screws each side. On door hinge side, also use spacer provided, using longer fixing screws **A**.

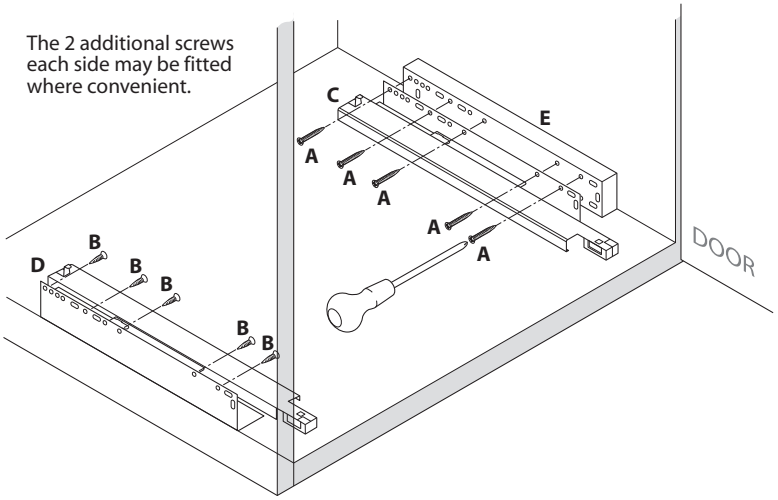

3 Fit rear corner brackets to tray.

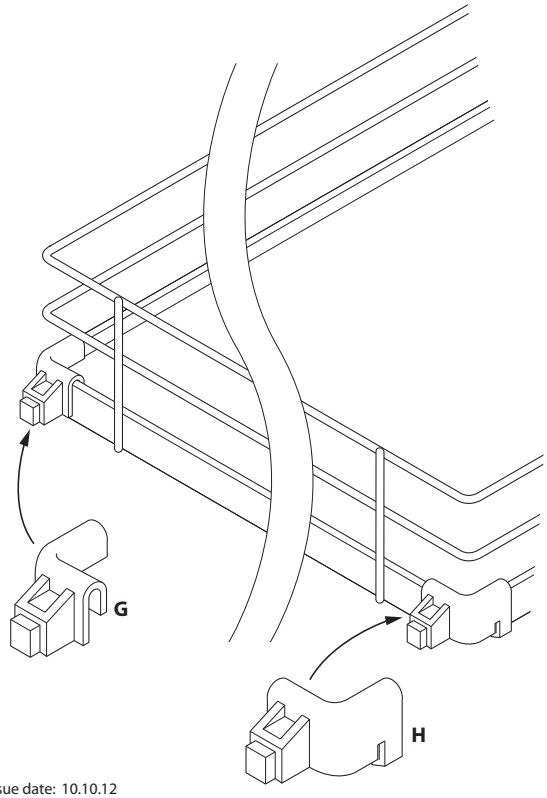

4 Slide the tray along the runners until it locates on the rear stops and locks on the front clips.

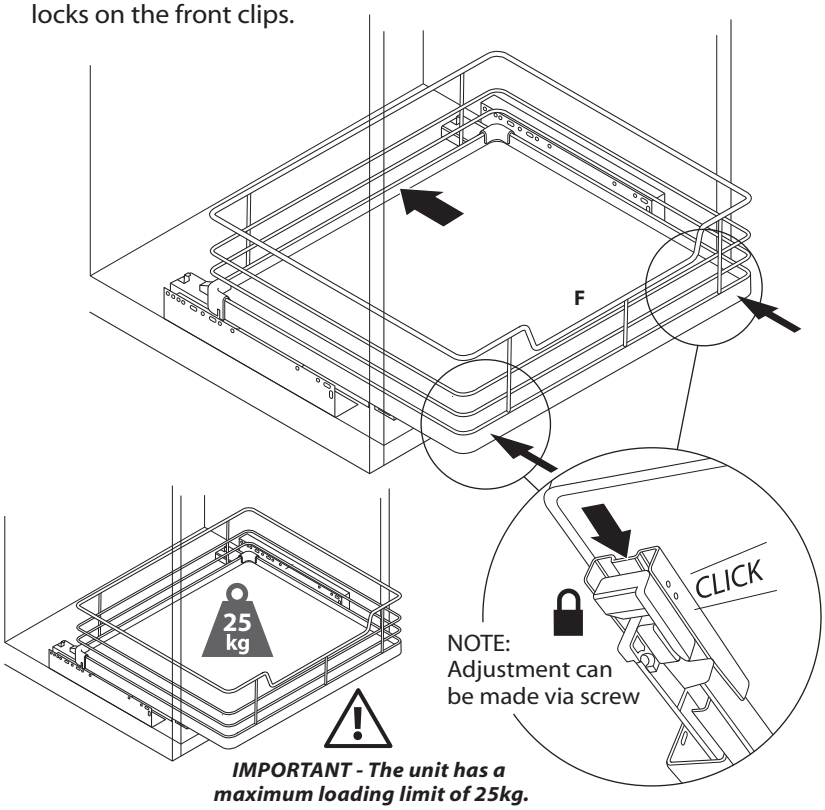

IMPORTANT - The unit has a maximum loading limit of 25kg.

Issue date: 10.10.12