Letterplate (Nu Mail)
Fitting Instructions

Door Preperation - Routing Detail

1. Prior to installation of the NuMail letterplate, ensure that the door has been routed correctly according to the diagram below:

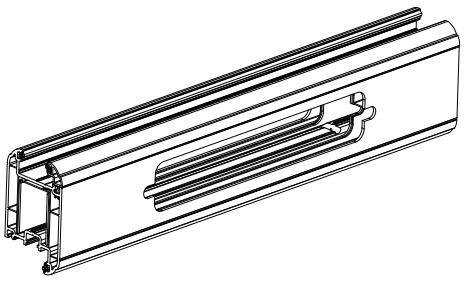

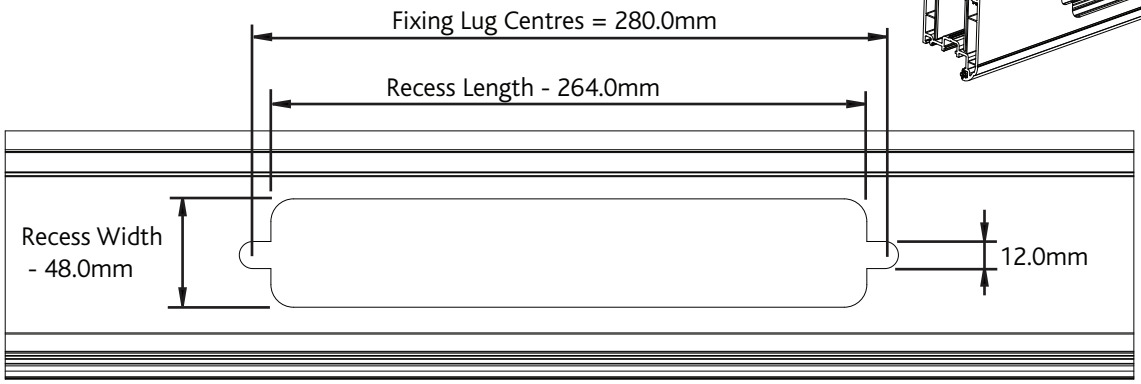

Letterplate Assembly

2. The packaging contains three sizes of fixing bolts. The door thickness should be measured to determine the correct size of bolt (see diagram below of the most common door sizes).

Note : Profile thicknesses vary greatly and it may be necessary to trim the bolt length to suit.

DOOR THICKNESS	BOLT LENGTH	QTY
66.0mm-74.0mm PVCu	73mm	2
55.0mm-64.0mm PVCu	63mm	2
42.0mm-48.0mm Timber/Composite	48mm	2

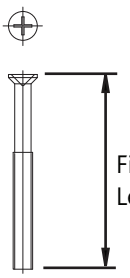

PVCu

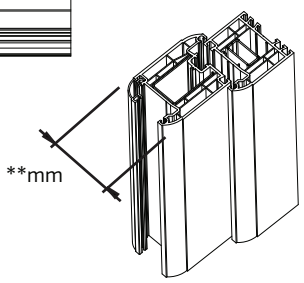

Timber / Composite

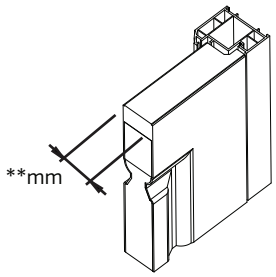

3. Identify which is the external and internal side of the letterplate. The external side of the letterplate is identified by attached fixing lugs as per images belowand can also be identified by finger recess underneath the letterplate flap.

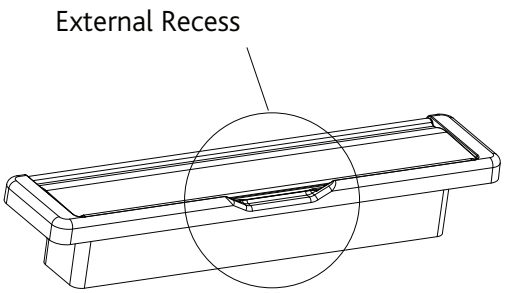

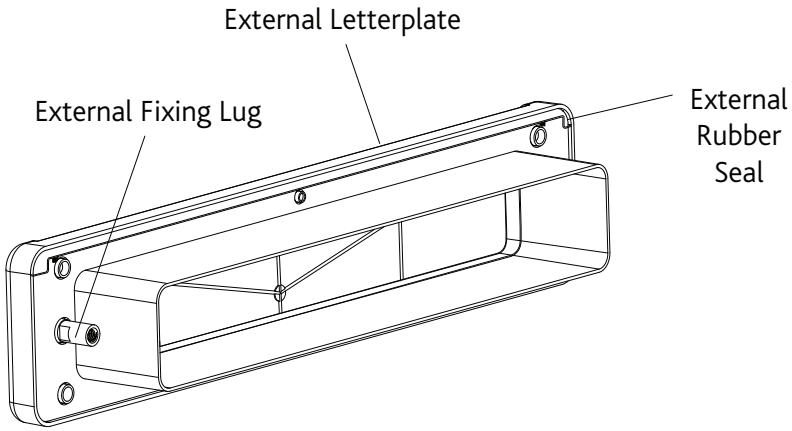

ERA Home Security Ltd. Valiant Way, Wolverhampton. WV9 5GB
Tel: 02476 585785 Fax: 02476 585786 Email: fabnfix@erahomesecurity.com
www.erahomesecurity.com