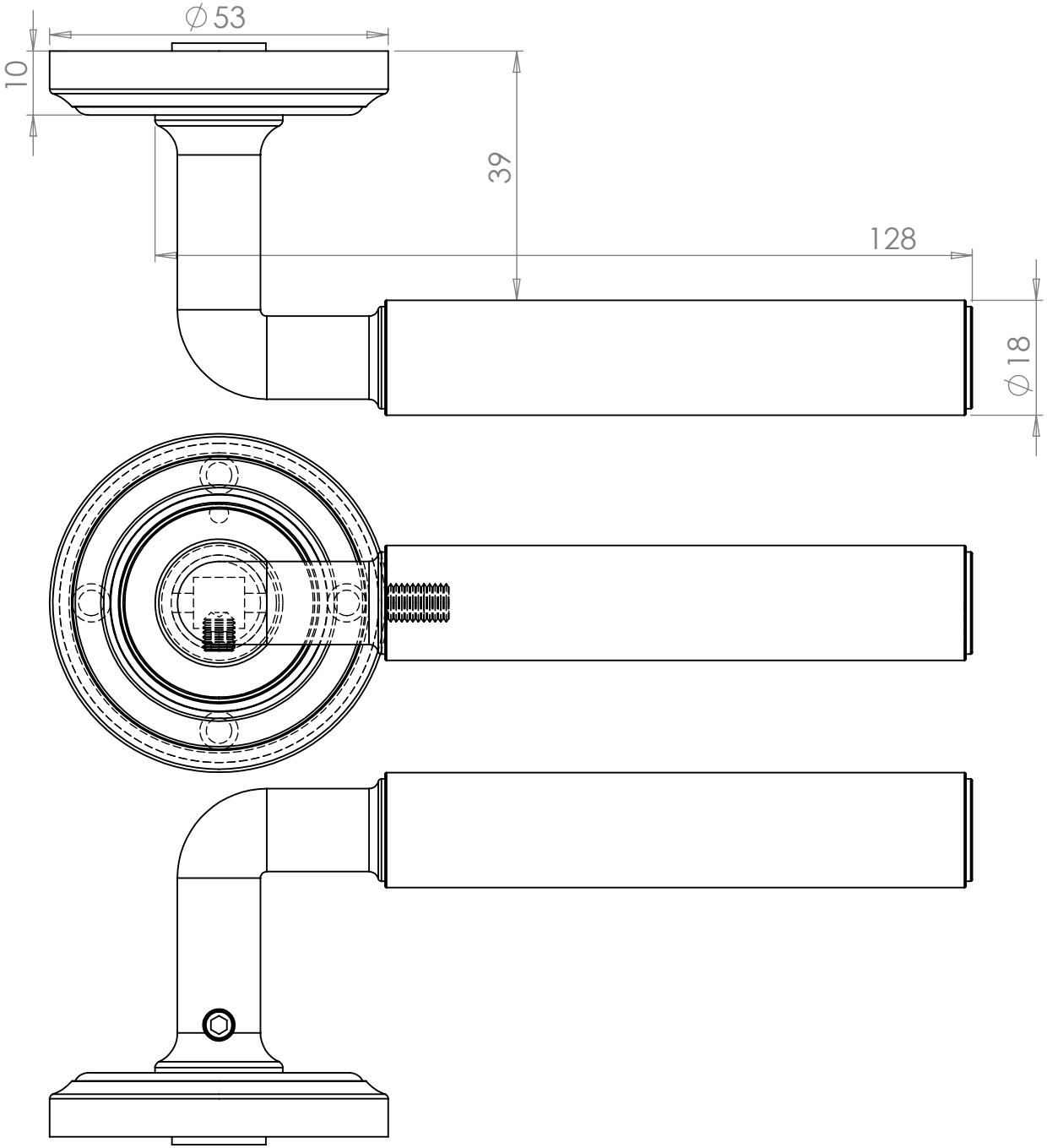

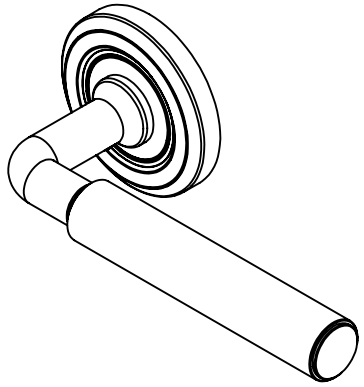

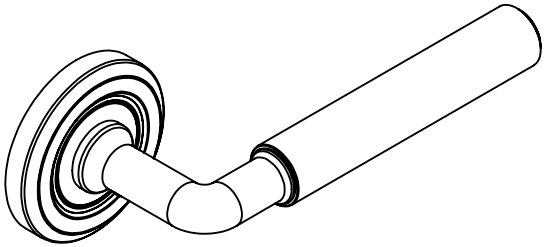

FRELAN HARDWARE

TITLE:

JV650

DRAWN BY:	DATE:	ISSUE NO:	DO NOT SCALE DRAWING		A4
JM		1	**SIZES:** SIZES SHOWN IN DRAWINGS, CATALOGUES AND WEBSITES ARE APPROXIMATE AND WE RESERVE THE RIGHT TO CHANGE THESE WHERE NECESSARY AND WITHOUT NOTICE	DWG NO.	
				SCALE:1:2	SHEET 1 OF 1