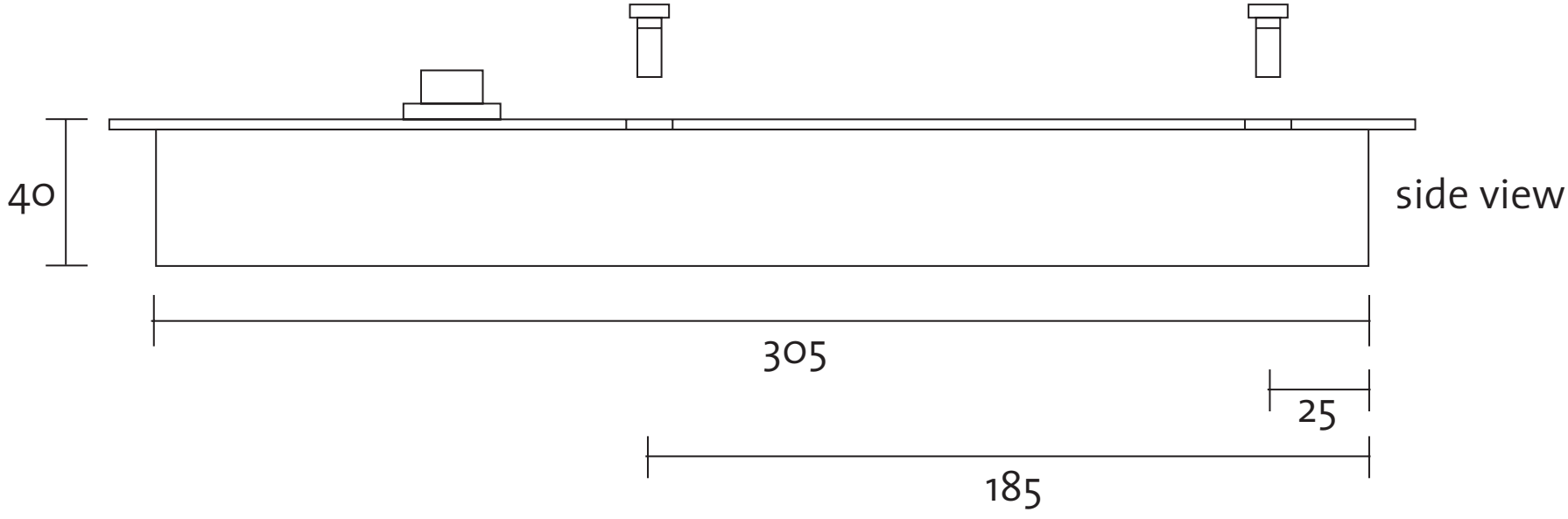

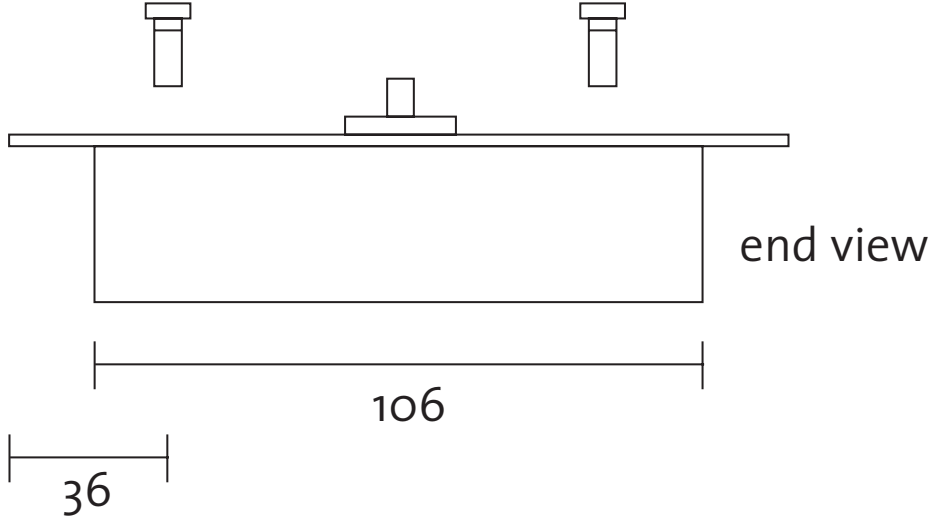

All dimensions are in mm.