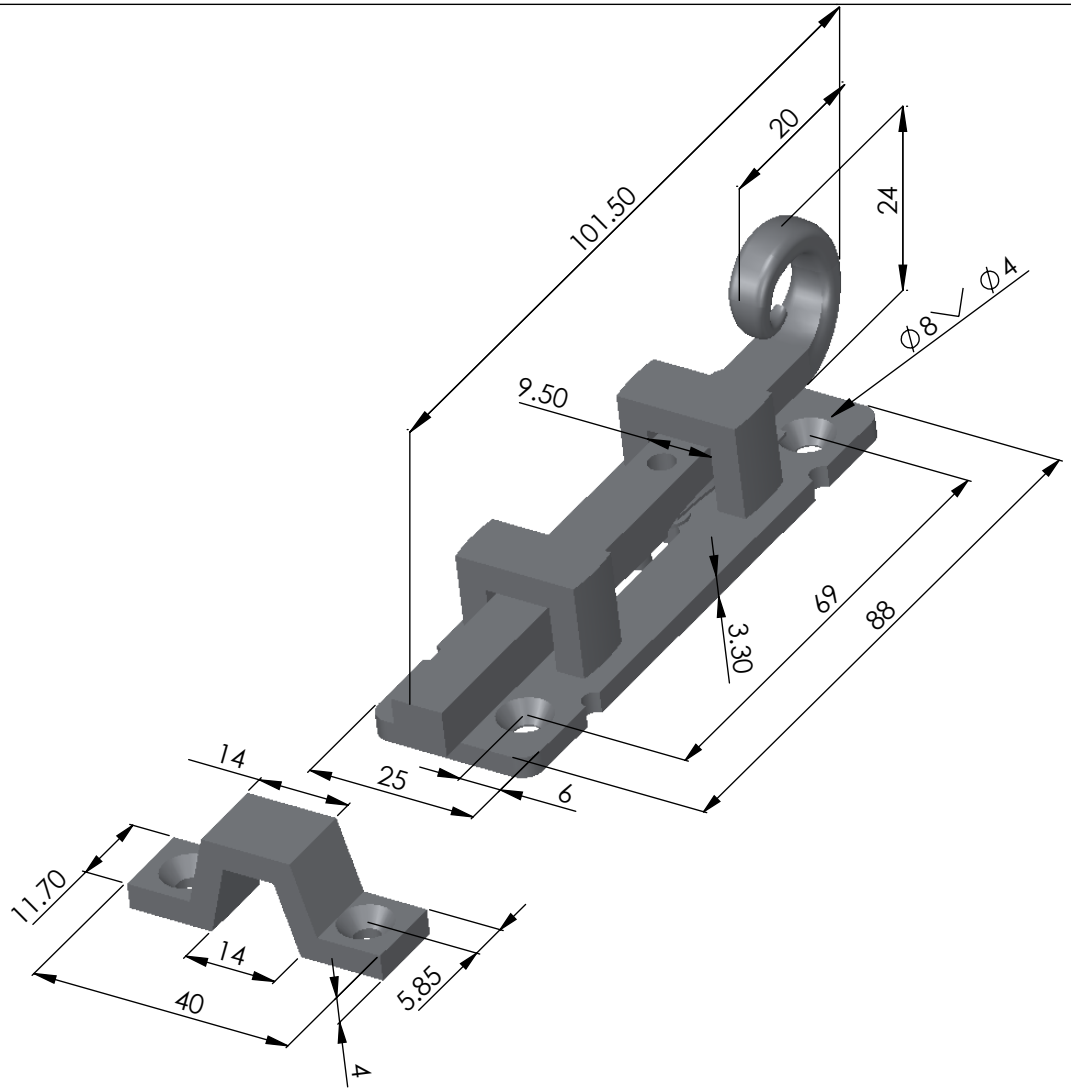

CODES AND FINISHES OF SIMILAR PARTS		
S R.	**Part code**	**Product finish**
1		
2		
3		
4		
5		

MATERIAL	MAL. IRON	**FINISH**	ANTIQUE BLACK IRON
UOM- Piece			**WEIGHT(gms) :- 115**
DIMENSIONS ARE IN MM UNLESS OTHERWISE SPECIFIED TOLERANCE : CONTACT BUYER			
Name	**Drawn by**	**Q.C**	**Factory**
Sign	SHM	PM	
Date	22/02/18	22/02/18	

2c . Packaging Instructions
2b. Accessories Included 6 screws
2a. Inspection Process
2. Refer QC Sheet For ;
1. Drawing Rev 1 Dated 22/02/18
Notes :

SCALE- 1:1	DWG NO : 100922
TITLE :	**Elden Curly Tail Cranked Bolt - 85 x 25mm**
PRODUCT CODE:	**243844**
REV NO. - 1 22.02.18	SHEET 1 OF 1

IronmongeryDirect
MASTERS OF OUR TRADE