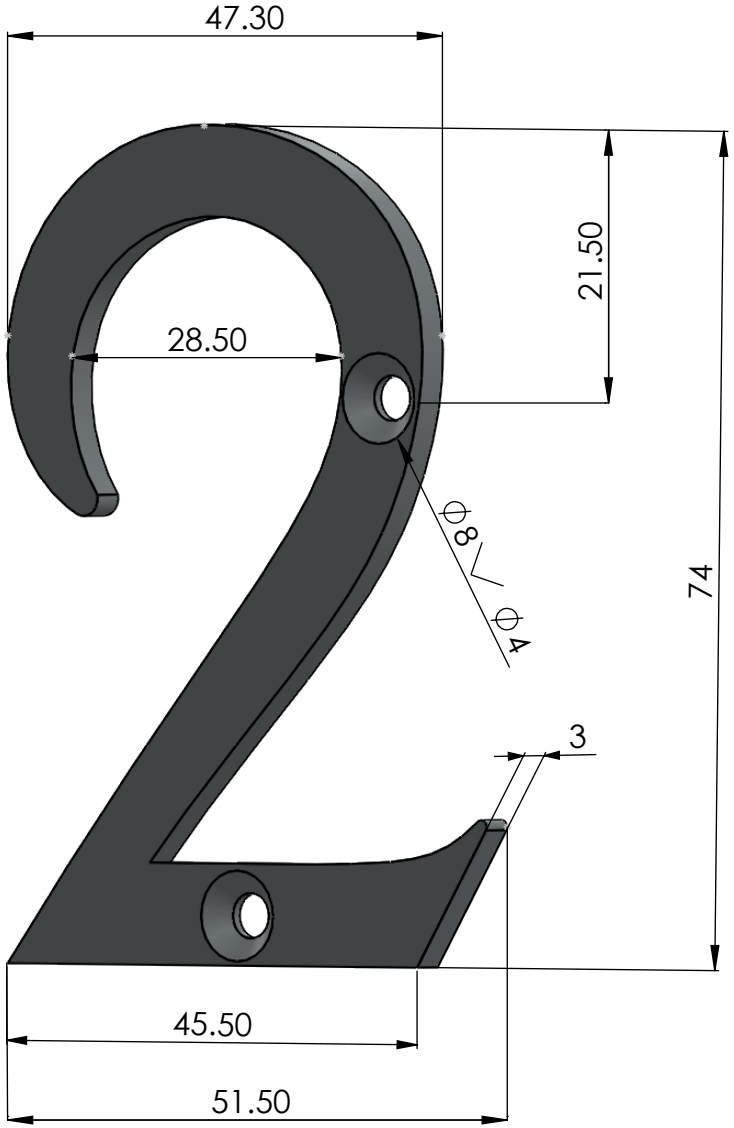

CODES AND FINISHES OF SIMILAR PARTS		
S R.	**Part code**	**Product finish**
1		
2		
3		
4		
5		

MATERIAL	BRASS	**FINISH**	SATIN CHROME
UOM- Piece		**WEIGHT(gms) :-40**	

DIMENSIONS ARE IN MM
UNLESS OTHERWISE SPECIFIED TOLERANCE :
CONTACT BUYER

Name	**Drawn by**	**Q.C**	**Factory**
Sign	SHM	PM	
Date	11/01/18	11/01/18	

2c . Packaging Instructions
2b. Accessories Included 2 Screws
2a. Inspection Process
2. Refer QC Sheet For ;
1. Drawing Rev 1 Dated 11/01/18
Notes :

SCALE- 3:2	DWG NO : 100859
TITLE :	76mm Screw Fixed Numeral - 2
PRODUCT CODE:	133744
REV NO. - 1 11.01.18	SHEET 1 OF 1

IronmongeryDirect
MASTERS OF OUR TRADE