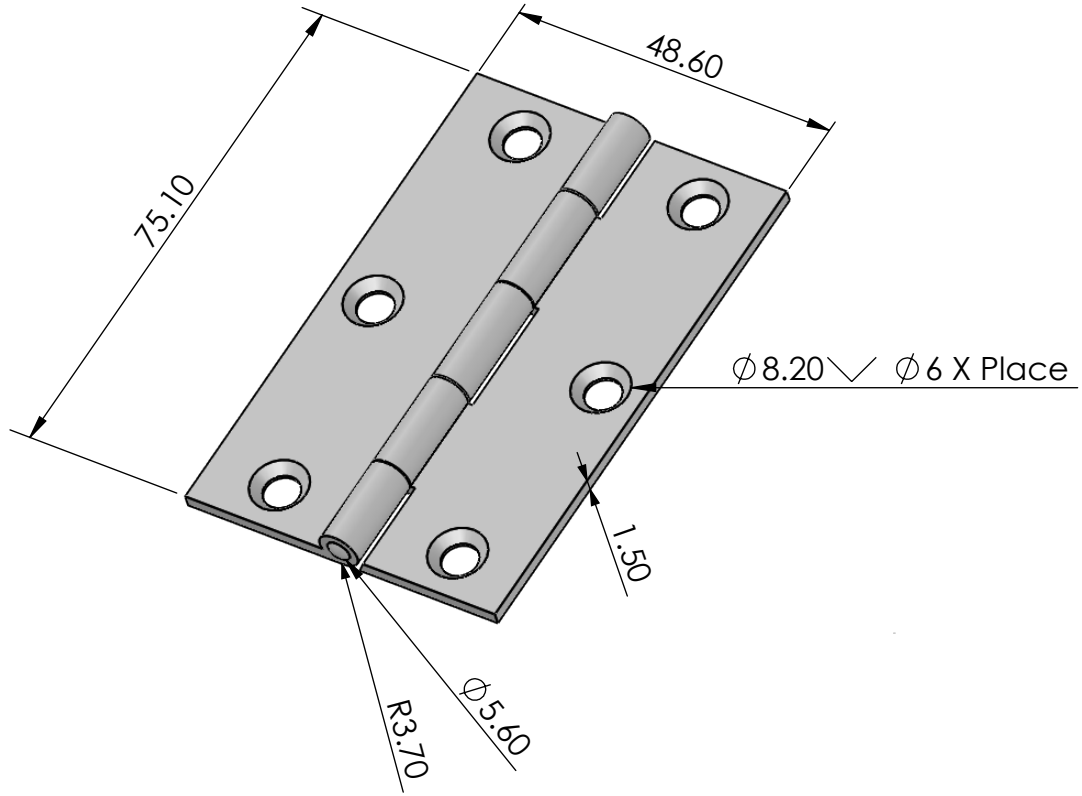

CODES AND FINISHES OF SIMILAR PARTS		
S R.	**Part code**	**Product finish**
1		
2		
3		
4		
5		

MATERIAL	STEEL	**FINISH**	ZINC PLATED
UOM- PAIR		**WEIGHT(gms) :-111**	

DIMENSIONS ARE IN MM
UNLESS OTHERWISE SPECIFIED TOLERANCE :
CONTACT BUYER

Name	**Drawn by**	**Q.C**	**Factory**
Sign	BP	PM	
Date	12/07/19	12/07/19	

2c . Packaging Instructions
2b. Accessories Included :-12 Screw
2a. Inspection Process
2. Refer QC Sheet For ;
1. Drawing Rev 1 Dated 12/07/19
Notes :

SCALE- 1:1	DWG NO : 102118
TITLE :	**Steel Hinge - 75 x 50mm - Zinc Plated - Pair**
PRODUCT CODE:	458691
REV NO. - 1 12/07/19	SHEET 1 OF 1

IronmongeryDirect
MASTERS OF OUR TRADE