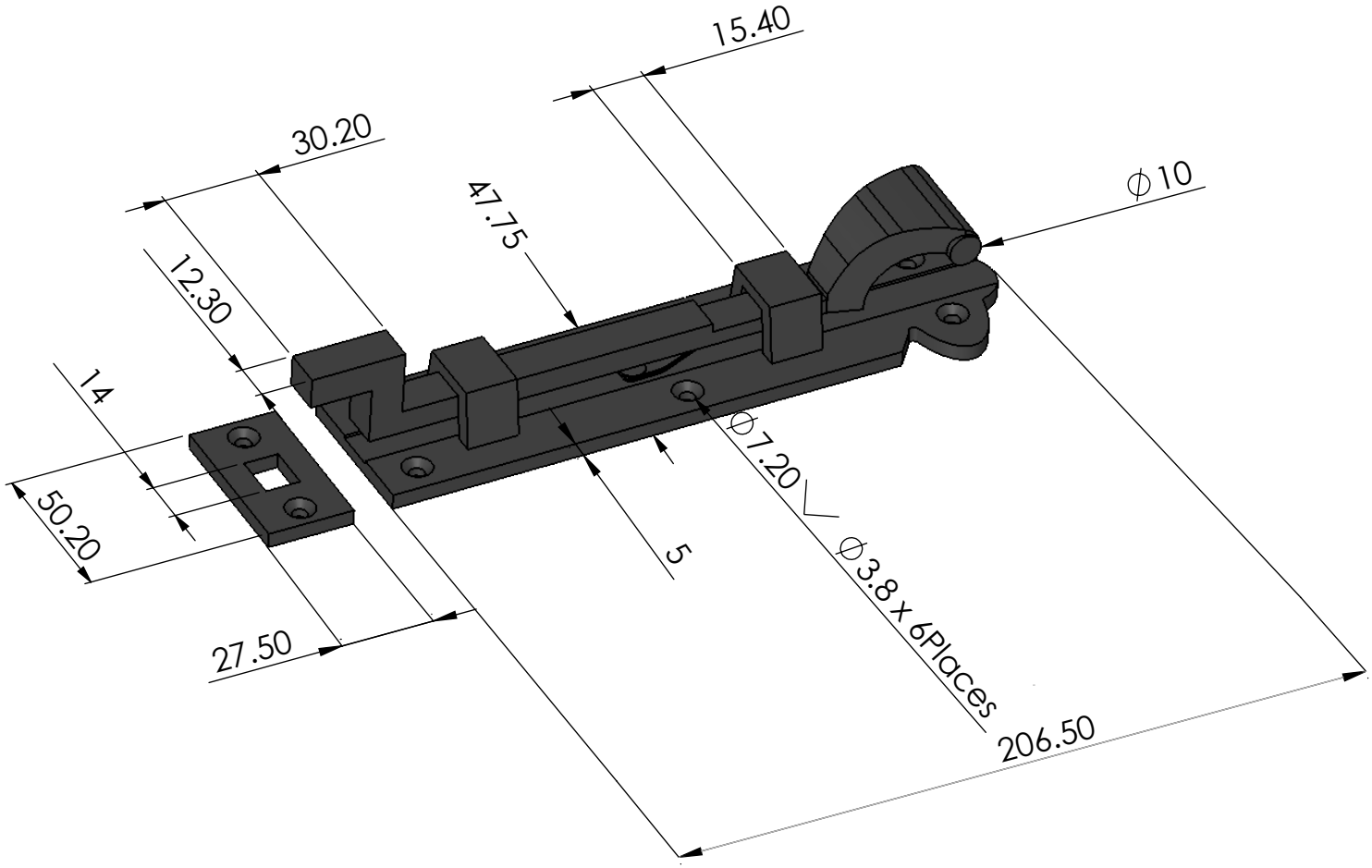

CODES AND FINISHES OF SIMILAR PARTS		
S R.	**Part code**	**Product finish**
1		
2		
3		
4		
5		

MATERIAL	MAL. IRON	**FINISH**	ANTIQUE BLACK
UOM- PIECE		**WEIGHT(gms) :-567**	

DIMENSIONS ARE IN MM
UNLESS OTHERWISE SPECIFIED TOLERANCE :
CONTACT BUYER

Name	**Drawn by**	**Q.C**	**Factory**
Sign	YR	DP	
Date	11/05/19	11/05/19	

2c . Packaging Instructions
2b. Accessories Included - 8 Screw
2a. Inspection Process
2. Refer QC Sheet For ;
1. Drawing Rev 1 Dated 11/05/19
Notes :

SCALE- 1 : 2	DWG NO : 101989
TITLE :	**Elden Blacksmith Cranked Bolt - 203mm - Antique Black Iron**
PRODUCT CODE:	465034
REV NO. - 1 11/05/19	SHEET 1 OF 1

IronmongeryDirect
MASTERS OF OUR TRADE