Sash Balance Installation

Type 'D' balances

Balance UK Limited, 30-32 Martock Business Park,
Great Western Road, Martock, Somerset TA12 6HB

Telephone 01935 826 960
Facsimile 01935 829215
Website www.balanceuk.com
Information Sheet No. 5

Read instructions fully before installing balances.
It is recommended that before balances are installed the sashes are glazed and in the case of timber windows all painting is completed ensuring that both sashes slide freely in the frame. While sketches show timber windows throughout, fitting instructions apply to all types.

Preparation of Windows

1 Grooves to house balances can be in either frame jambs or in sash stiles, rounded or square and must be of minimum dimensions shown (Figs. 1 & 2).
Bottom of sashes should be prepared to suit balance foot attachment to be used. Cut-outs to be sufficient depth to receive attachments and screw heads.

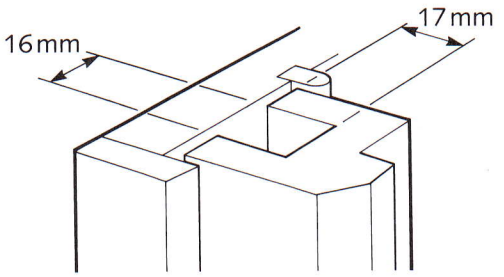

Fig. 1

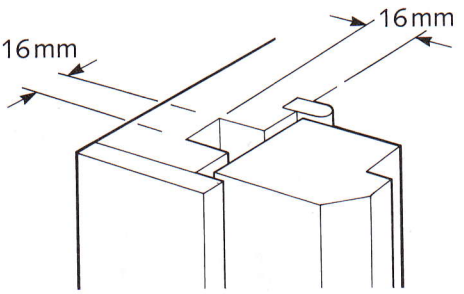

Fig. 2

Fig. 3 Bottom rail preparation for standard foot.

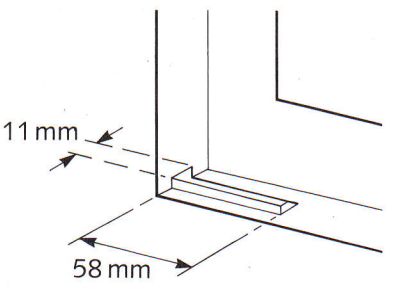

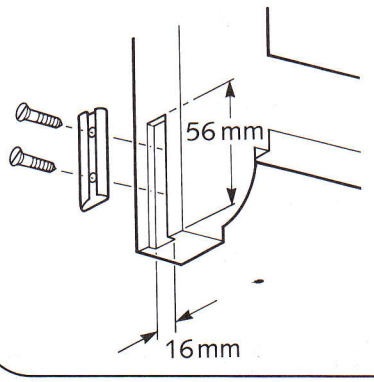

Fig. 4 Stile preparation for channel fitting.

Fig. 5 Bottom rail preparation for standard foot - Grooved stile.

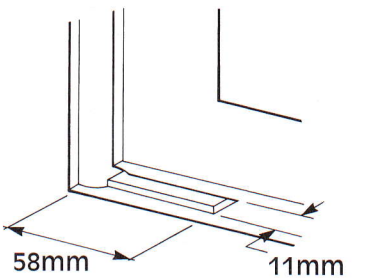

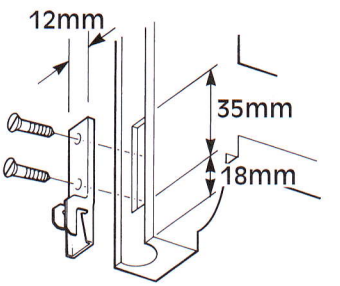

Fig. 6 Grooved stile preparation (fix foot attachment prior to fitting sash into frame)

Checking balances

2 It is important that the balances used are suitable for the weight of the sash. They are manufactured in three weight groups and identified by a number 2, 4 or 6 stamped on the spiral rod. (See Fig. 7).

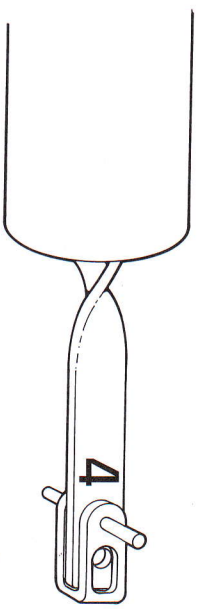

Fig. 7

D2	**is for sash weight up to 6.8Kg (10lb)**
D4	**for over 6.8Kg (15lb) up to 13.6Kg (30lb)**
D6	**for over 13.6Kg (30lb) up to 18.1Kg (40lb)**

Installing Balances

3 It is important to note that short balances are used for top sash and long balances for bottom sash, assuming sashes are of equal height.

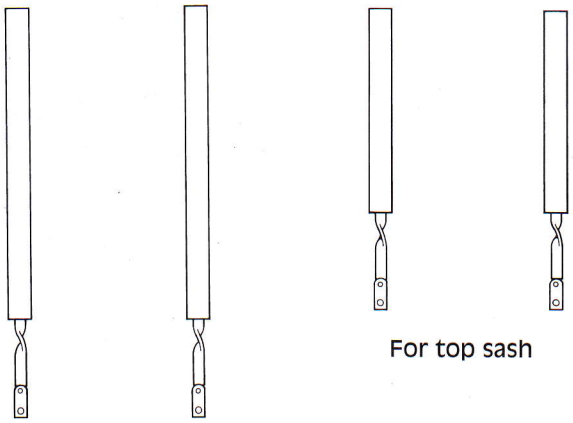

Fig. 8

When sashes are of equal size and in lowered position, the balances can be inserted easily into the grooves. (See Fig 9). In the case of unequal size sashes it is possible to slightly bow the balance for insertion into the groove of the larger sash. In some cases larger sashes may have to be removed.

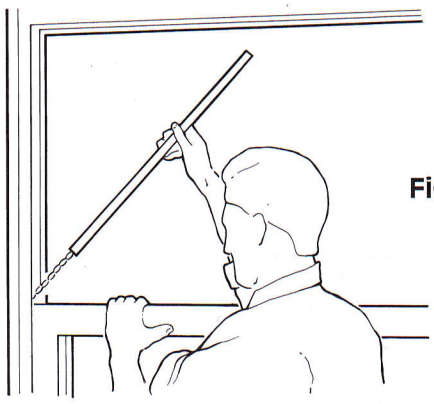

Fig. 9

Fix top balances to the frame jamb at the centre of the groove and tight up against the frame head, using drive screws supplied. (Fig 10).

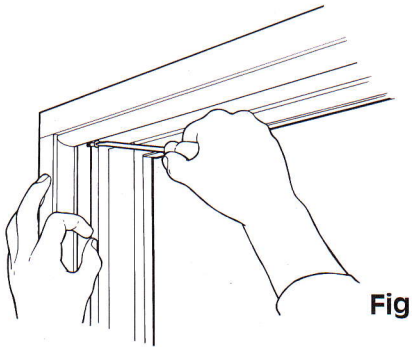

Fig. 10

Fixing travel stops

4 Fix travel stops provided, the shorter one at the top of the bottom sash run. (See Fig. 11).

In the case of non-standard applications special stops may be required. In such cases suitable longer timber stops should be substituted for the standard metal type supplied. These should be long enough to prevent the balance from being extended by more than twice its tube length.

IMPORTANT: FAILURE TO FIT TRAVEL STOPS MAY RESULT IN BALANCE FAILURE.

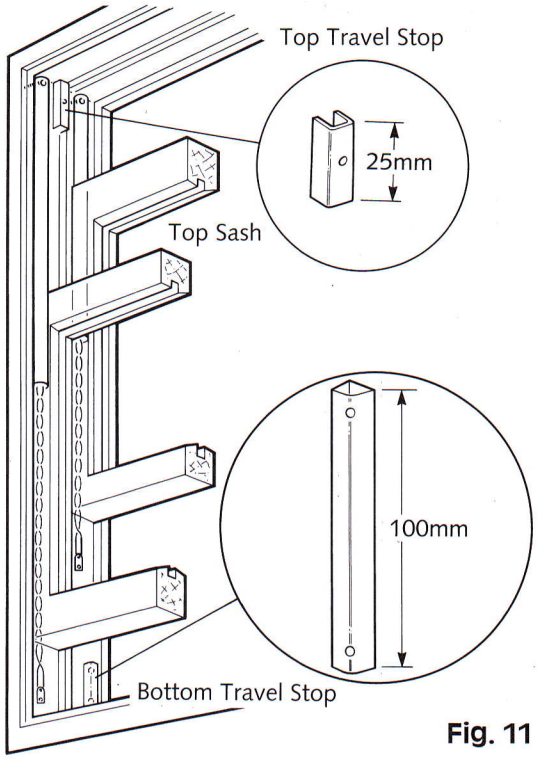

Fig. 11

Fixing foot attachments

5 Raise the sashes as high as possible and prop up. **Fix foot attachments ensuring that spiral rod is located between sides of fitting.**

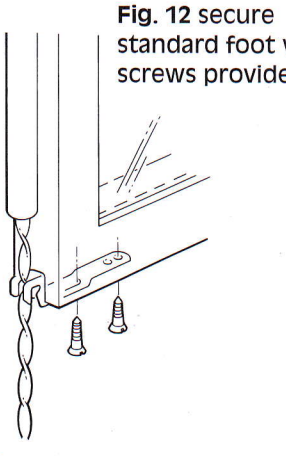

Fig. 12 secure standard foot with screws provided

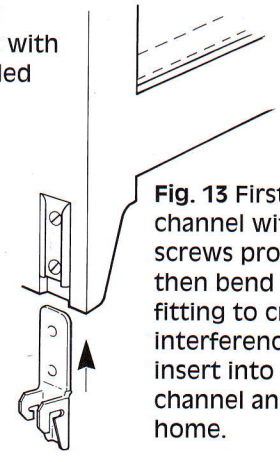

Fig. 13 Firstly fix channel with screws provided, then bend end of fitting to create interference fit, insert into channel and tap home.

Balancing sashes – adjusting balances

6 Thread the spiral rod upwards into the tube by revolving anti-clockwise, left hand turn as viewed from underside (see Fig. 14). Using the hook tool provided, pull the spiral rod downwards about 200mm (8ins) without rotating. Now apply adjustment turns in an anti-clockwise direction (see Fig. 15). The number of turns will depend on the sash weight.
Refer to adjustment charts (back page) for number of turns to be applied. Return the spiral rod upwards without rotating and engage pin in foot attachment (see Fig. 16). Repeat adjustment for other balance, remove prop and then try sash action.
Correct balancing is achieved when sash is just held in its highest position. If necessary make adjustment turns in either direction on both balances obtain this condition.
Do not over tension.

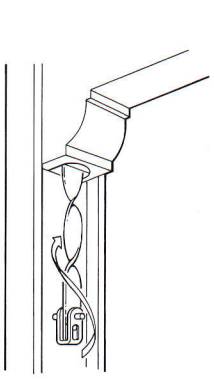

Fig. 14

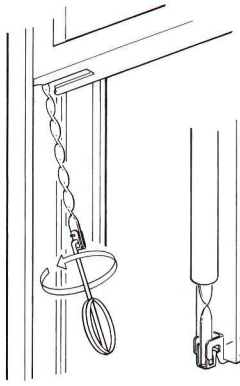

Fig. 15

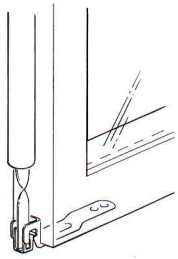

Fig. 16

Slide and tilt applications

For slide and tilt applications in timber windows, Balance UK provide an aluminium channel, the overall dimensions of which are indicated. Purpose made pivot shoes and pivot bars are also available for this system. Bottom rails of sashes should be capable of accepting pivot bars (see detail - the dimensions shown are for standard pivot bars). For slide and tilt applications in aluminium or plastic profiles a range of tilt shoes, pivot bars and balance types are available.
A INSTALLING SASHES Slide the tilt shoe into end of the channel and fix channel frame jamb. Insert balance and secure at the top using screw supplied. In the case of aluminium or plastic windows refer to the system manufacturer's workshop manual.

B BALANCING SASHES - ADJUSTING BALANCES Thread spiral rod upwards into the tube by revolving anti-clockwise, left hand turn as viewed from underside (see Fig. 14). Using the hook tool provided, pull the spiral rod downwards about 200mm (8ins) without rotating. Now apply adjustment turns in an anti-clockwise direction. The number of turns will depend on the sash weight. Refer to adjustment charts (back page) for number of turns to be applied. Return the spiral rod upwards without rotating and engage pin in the pivot shoes as shown ensuring that the uppermost pin is fully engaged behind the metal ears of the shoe. Repeat adjustment for other balance.

C INSTALLING SASHES To fix sash into frame, lock the tilt shoes in a convenient position using pivot bar to turn the cam through 90°. Lift sash into position and slide the pivot bars into the shoes (see Fig. 17) ensuring full engagement Tighten fixing screws, tilt sash up into sliding position, engage the latch guide at the top and try the sash. If adjustment is necessary remove the sash by reversing above procedure, adjust as previously described and refit. **Do not over tension.**

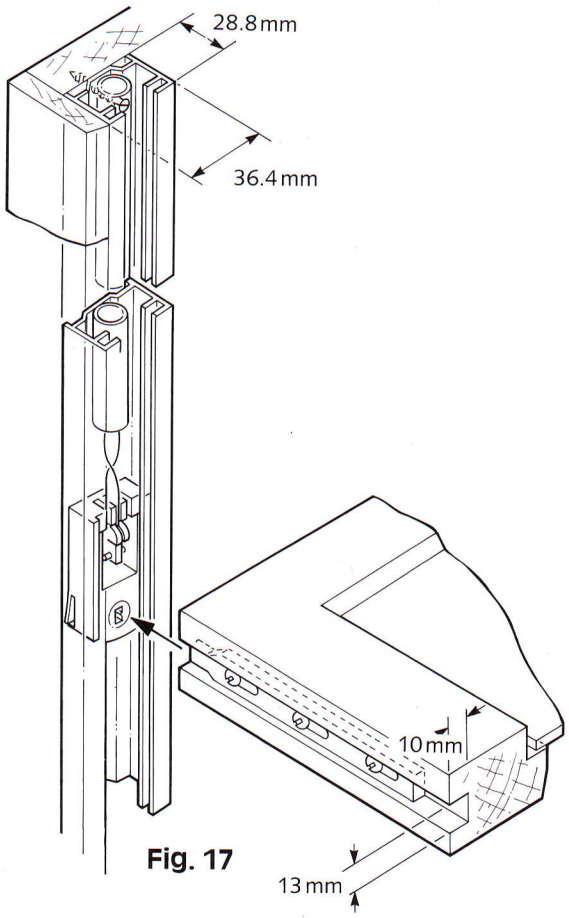

Fig. 17

Maintenance

Depending upon location, cleaning and lubrication of the spiral rod may be desirable after a length of time, the period of which will vary according to site circumstances. A few drops of light oil applied to the spiral rod will always improve the operating action of a balance after long service.

Important

DON'T bend the spiral rod.
DON'T forget limit stops.
DON'T use 'D' balances on Sashes over 18.1Kg (40lb) glazed weight.
DON'T tension balance more than necessary.
DON'T tension balance before glazing.

Adjustment Charts - Type 'D' Balances

Read these charts with reference to section 6 of the 'installation instructions' and section B of the 'Slide and Tilt Applications'.

To determine the suggested number of adjustment turns:
1. Establish balance number (see section 2 of 'installation instructions').
2. Establish sash weight.
3. Read across from the relevant balance reference number, and down from the required sash weight to find the suggested number of adjustment turns.

Denotes type of 'D' balance (e.g. D4) ← **D4 15 04** → Weight group (02, 04 or 06)

Tube length in inches (e.g. 15 inches)

D2

SASH WEIGHT

Tube Length	Kgs	2.3	2.7	3.2	3.6	4.1	4.5
ins	lbs	5	6	7	8	9	10
11		1	1	1	1	2	2
12		1	1	1	2	2	2
13		1	1	1	2	2	2
14		2	2	2	2	3	3
15		2	2	2	3	3	3
16		2	2	2	3	3	3
17		2	2	2	3	3	3
18		2	2	3	3	3	4
19		2	2	3	3	3	4
20		2	2	3	3	3	4
21		3	3	3	4	4	4
22		3	3	3	4	4	4
23		3	3	4	4	4	5
24		3	3	4	4	4	5
25		3	3	3	4	4	5
26		3	3	3	4	4	5
27		3	3	4	4	5	5
28		3	3	4	4	5	5
29		4	4	4	5	5	6
30		4	4	4	5	5	6
31		4	4	5	5	6	6
32		4	4	5	5	6	6
33		5	5	5	6	6	7
34		5	5	5	6	6	7
35		5	5	6	6	7	7
36		6	6	6	7	7	8
37		6	6	6	7	7	8
38		6	6	7	7	8	8
39		7	7	7	8	8	9
40		7	7	7	8	8	9
41		7	7	8	8	9	9
42		8	8	8	9	9	10
43		8	8	8	9	9	10
44		8	8	9	9	10	10
45		9	9	9	10	10	11
46		9	9	10	10	11	11
47		9	9	10	10	11	11
48		10	10	11	11	12	12
49		10	10	11	11	12	12

D4

SASH WEIGHT

Tube Length	Kgs	4.5	5.4	6.4	7.3	8.2	9.1	9.9	10.9	11.8	12.7	13.6
ins	lbs	10	12	14	16	18	20	22	24	26	28	30
10		1	1	1	1	2	2	2	3	3	3	3
12		1	1	1	1	2	2	2	3	3	4	4
14		1	1	2	2	3	3	3	4	4	4	5
16		1	1	2	2	3	3	4	4	4	5	5
18		1	1	2	3	3	4	4	4	5	5	6
20		1	1	2	3	3	4	4	4	5	5	6
22		1	1	2	3	3	4	4	4	5	5	6
24		1	1	2	3	3	4	4	4	5	5	6
26		1	1	2	3	3	4	4	5	5	6	6
28		1	2	2	3	3	4	4	5	5	6	7
30		1	2	2	3	4	4	4	5	5	6	7
32		1	2	2	3	4	4	4	5	5	6	7
34		1	2	2	3	4	4	5	5	6	7	8
36		1	2	3	3	4	4	5	6	7	7	8
38		1	2	3	3	4	4	5	6	7	8	8
40		2	2	3	3	4	5	5	6	7	8	9
42		2	2	3	4	4	5	6	7	8	8	9
44		2	2	3	4	4	5	6	7	8	9	9
46		2	2	3	4	4	5	6	7	9	9	10
48		2	2	3	4	4	5	6	7	8	9	10

D6

SASH WEIGHT

Tube Length	Kgs	14.5	15.4	16.3	17.2	18.1
ins	lbs	32	34	36	38	40
10		-	-	-	-	-
12		-	-	-	-	-
14		2	2	2	3	3
16		2	2	3	3	4
18		2	3	3	4	4
20		2	3	3	4	4
22		2	3	3	4	4
24		3	3	3	4	5
26		3	3	4	4	5
28		3	3	4	4	5
30		3	4	4	5	5
32		3	4	4	5	5
34		4	4	5	5	6
36		4	4	5	5	6
38		4	5	5	6	6
40		4	5	5	6	6
42		5	5	6	6	7
44		5	5	6	6	7
45		5	6	6	7	7
46		5	6	6	7	8
47		6	6	7	7	8
48		6	6	7	8	8

CODE BB-FIT-40500