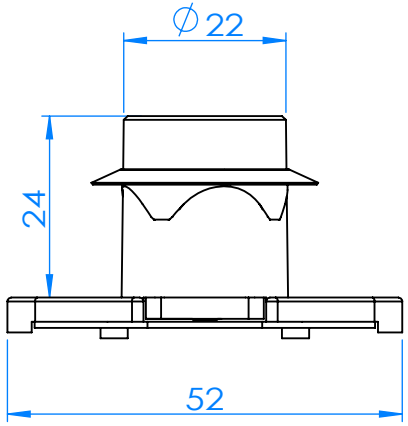
∅22
24
52

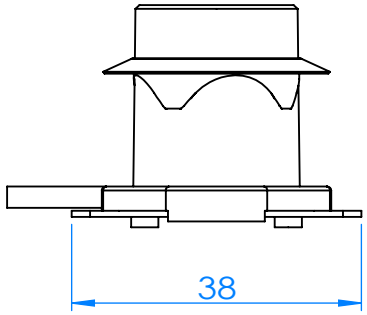
38

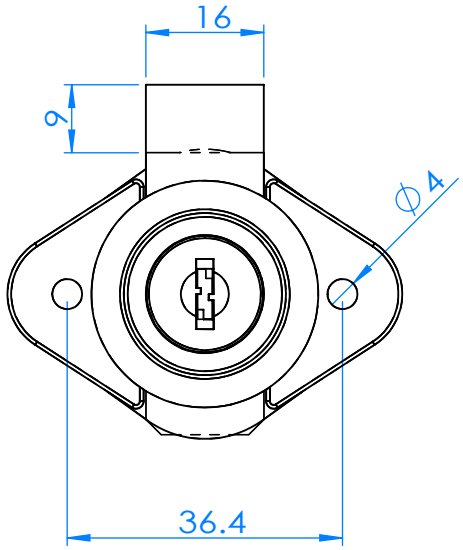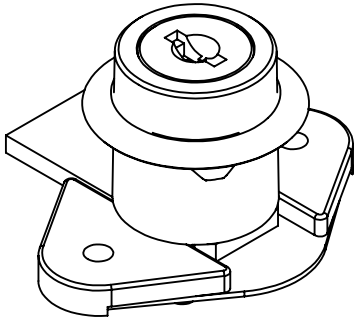
16
9
∅4
36.4